Yalelift 360

Yalelift 360 ATEX
Hand chain hoist

Capacity 500 - 20000 kg

Areas of operation as well as operator conditions have been improved far beyond those of a classical hand chain hoist. On basis of the European Directive 2014/34/EU this model series has been further developed for the use in potentially explosive atmospheres (ATEX zones).

Rotating hand chain guide!



Image shows MEDIUM design

360°

ERLEBEN SIE DIE 360° VORTEILE

Ausstattung und Verarbeitung

- The enclosed robust stamped steel housing protects all internal components even in the toughest conditions.
- The extremely low headroom allows maximum use of the lifting height.
- The 360° rotating hand chain guide allows the operator to work from virtually any position, in confined spaces or above the load. The Yalelift can even be operated from the side of the load which also makes it possible to use the hoist for horizontal pulling or tensioning. Due to the additional flexibility, the operator is no longer forced to work in the danger zone near the load.
- The components of the load pressure brake are made of high-quality materials and are additionally galvanized and yellow chromated as corrosion protection. Furthermore, the hand chain wheel is equipped with a cooling body in order not to exceed the specified temperature (135 °C) of temperature class T4.
- Chain guide and gearbox are almost totally enclosed. Even under the toughest conditions the internal gearbox remains protected.
- The hardened load sheave with four precision machined pockets ensures accurate movement of the load chain.
- The surface protected zinc-plated alloy steel load chains fulfil all requirements of current national and international standards and regulations. They are optimally matched to the load sprocket and ensure safe and long-lasting operation of the unit.
- Forged load and suspension hooks that yield under overoad instead of breaking, are made of high tensile steel. The hooks are fitted with robust safety latches and rotate 360°.
- Explosion protected version with MKS spark resistant coating.
- Copper-coated suspension and load hooks for MEDIUM design or higher.
- Stainless steel load chain for HIGH design.

Options

- Adjustable overload protection device.
- Chain container
- Additional coating (see page 52-53)

INFO

Easy modification from Yalelift 360 ATEX to Yalelift IT ATEX is possible.

Technical data Yalelift 360 ATEX BASIC II 3G Ex h IIA T4 Gc / II 3D Ex h IIIA T135 °C Dc

Model	Art.-No.	Capacity kg	Number of chain falls	Chain dimensions d x p in mm/ design	Lift per 1 m hand chain overhaul mm	Handle pull at WLL daN	Weight at standard lift (3 m) kg
YL ATEX 500	N04705021	500	1	5 x 15 - T	33	21	9
YL ATEX 1000	N04705022	1000	1	6 x 18 - T	20	30	13
YL ATEX 2000	N04705023	2000	1	8 x 24 - T	14	32	21
YL ATEX 3000	N04705024	3000	1	10 x 30 - V	12	38	34
YL ATEX 5000	N04705025	5000	2	10 x 30 - T	6	34	48
YL ATEX 10000	N04705026	10000	3	10 x 30 - V	4	44	71
YL ATEX 20000	N04705027	20000	6	10 x 30 - V	2	2 x 44	196

Technical data Yalelift 360 ATEX MEDIUM II 2G Ex h IIB T4 Gb / II 2D Ex h IIIB T135 °C Db

Model	Art.-No.	Capacity kg	Number of chain falls	Chain dimensions d x p in mm/ design	Lift per 1 m hand chain overhaul mm	Handle pull at WLL daN	Weight at standard lift (3 m) kg
YL ATEX 500	N04705007	500	1	5 x 15 - T	33	21	9
YL ATEX 1000	N04705008	1000	1	6 x 18 - T	20	30	13
YL ATEX 2000	N04705009	2000	1	8 x 24 - T	14	32	21
YL ATEX 3000	N04705010	3000	1	10 x 30 - V	12	38	34
YL ATEX 5000	N04705011	5000	2	10 x 30 - T	6	34	48
YL ATEX 10000	N04705012	10000	3	10 x 30 - V	4	44	71
YL ATEX 20000	N04705013	20000	6	10 x 30 - V	2	2 x 44	196

Technical data Yalelift 360 ATEX HIGH II 2G Ex h IIC T4 Gb / II 2D Ex h IIIC T135 °C Db

Model	Art.-No.	Capacity[1] kg	Number of chain falls	Chain dimensions d x p in mm/ design	Lift per 1 m hand chain overhaul mm	Handle pull at WLL daN	Weight at standard lift (3 m) kg
YL ATEX 500	N04705035	500	1	5 x 15 - S	33	21	9
YL ATEX 1000	N04705036	900	1	6 x 18 - S	20	30	13
YL ATEX 2000	N04705037	1500	1	8 x 24 - S	14	32	21
YL ATEX 3000	N04705038	2500	1	10 x 30 - S	12	38	34
YL ATEX 5000	N04705039	5000	2	10 x 30 - S	6	34	48
YL ATEX 10000	N04705040	7500	3	10 x 30 - S	4	44	71
YL ATEX 20000	N04705041	15000	6	10 x 30 - S	2	2 x 44	196

[1] Models in HIGH design are already labelled with reduced capacities when delivered.



Dimensions Yalelift 360 ATEX

Model	YL ATEX 500	YL ATEX 1000	YL ATEX 2000	YL ATEX 3000	YL ATEX 5000	YL ATEX 10000	YL ATEX 20000
A min., mm	300	335	395	520	654	825	1065
B, mm	17	22	30	38	45	68	85
C, mm	24	29	35	40	47	68	64
D, mm	133	156	182	220	220	220	303
E, mm	148	175	203	250	250	383	555
F, mm	148	167	194	219	219	219	250
G, mm	139	164	192	225	242	326	391
H, mm	206	242	283	335	352	436	501
I, mm	24	24	31	34	21	136	–
K, mm	61	70	83	95	95	95	396
L, mm	87	97	111	124	124	124	125
M, mm	110	125	156	178	285	401	471
N, mm	14	19	22	30	37	50	56

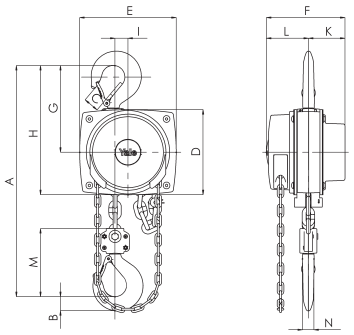

Yalelift 360 ATEX, 500 - 3000 kg, single fall

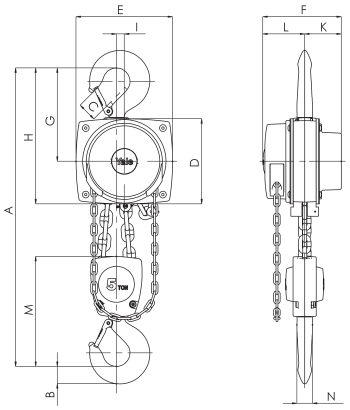

Yalelift 360 ATEX, 5000 kg, double fall

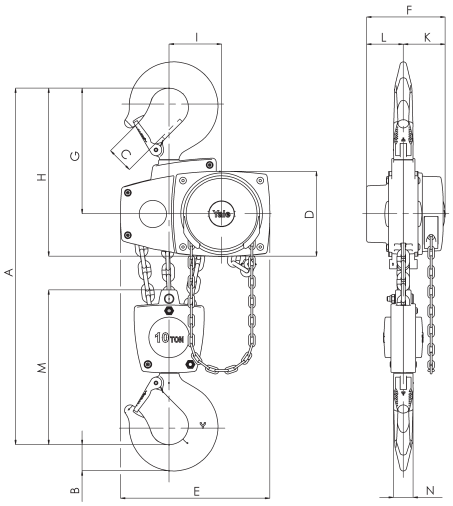

Yalelift 360 ATEX, 10000 kg, three falls

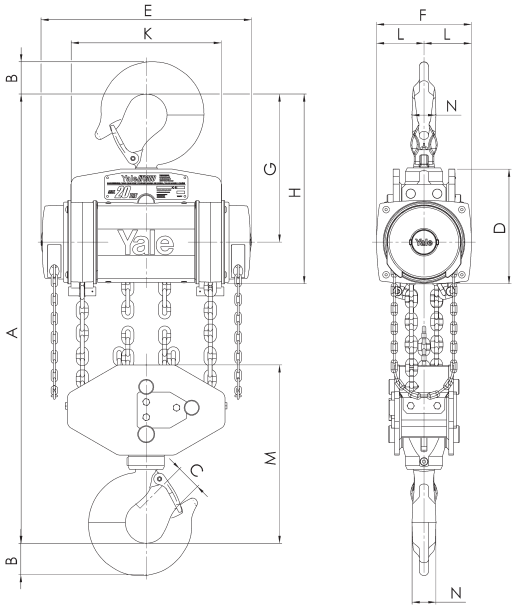

Yalelift 360 ATEX, 20000 kg, six falls